CORE VALUES | QUALITY PRODUCTS | SUPERIOR SERVICE

CORE® LIFTING PRODUCTS

FAIRLEADS

Crosby® McKISSICK®

ROPEBLOCK

CoreLifting.com

Crosby®

GUNNEBO® Industries

PRODUCT CATALOG

with application & warning information

Imperial

OVAL PATTERN CONSTRUCTION BLOCKS

Q-681-Z

Q-682-Z

Q-683-Z

- All blocks are galvanized.
- Sheave lubricated through pressure lube fitting in center pin.
- Assembled with self lubricated bronze bushing.
- Combines weight of regular oval blocks with strength of extra heavy oval blocks.
- Assembled with bolt type anchor shackle.
- Side plates are rounded to provide additional stiffness and reduce wear and chaffing of the rope.

Q-681-Z / Q-682-Z / Q-683-Z

Block Size (in)	Stock No.Bronze Bushed Steel Sheaves		
	Q-681-Z	Q-682-Z	Q-683-Z
6	760441	760665	-
6	760452	760676	760812
8	760463	760687	760823
10	760474	760698	760834

Q-681-Z / Q-682-Z / Q-683-Z

Block Size (in)	Sheave Dimensions (in)			Wire Rope Diameter (in)	Working Load Limit (short Tons)			Weight Each (lb)		
	Outside Diam.	Rim Thickness	Center Pin Dia.		Single	Double	Triple	Single	Double	Triple
6	6	1.00	.75	3/8	3	4	-	15	28	-
6	6	1.00	.75	1/2	3	4	5	16	28	32
8	8	1.25	1.00	5/8	4	6	7	29	43	62
10	10	1.25	1.00	5/8	4	7	8	38	61	80

4:1 Design Factor

© 2025 Kito Crosby. All Rights Reserved.

ROPEBLOCK
CATALOG

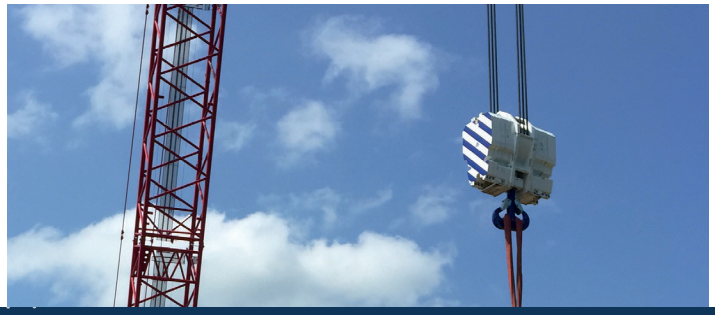

ROPEBLOCK

HORIZONTAL DIRECTIONAL BLOCKS

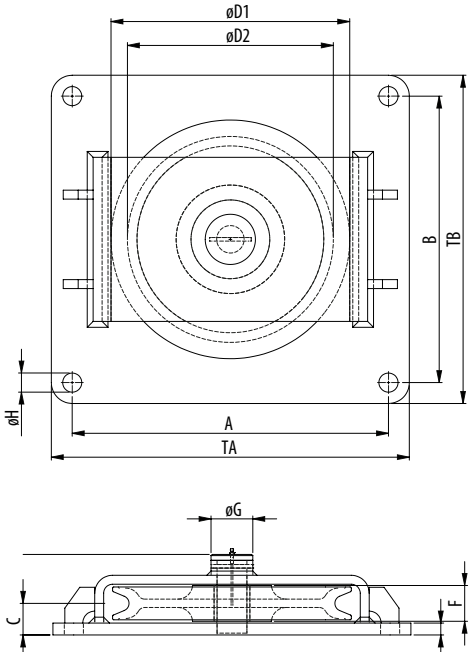

BRONZE BUSHING

Model No.	WLL (UStons)	Wire size up to (inch)	Bearing	Dimensions (inch)												Weight (lbs)
				øD1	øD2	A	B	C	F	øG	øH	T	TA	TB	TC	
HLS 105.10.1.1-BR	1.1	⅜	Bronze	4.92	4.13	7.09	5.91	0.89	1.06	0.87	0.35	0.31	7.87	6.69	2.13	5
HLS 120.12.1.2-BR	2.2	½	Bronze	5.91	4.72	8.66	7.48	1.22	1.57	1.18	0.43	0.39	9.84	8.66	2.83	10
HLS 165.14.1.3-BR	3.3	9⁄16	Bronze	7.87	6.50	11.42	9.45	1.30	1.57	1.18	0.53	0.47	12.60	10.63	2.99	17
HLS 210.18.1.4-BR	4.4	11⁄16	Bronze	9.84	8.27	14.17	12.20	1.52	1.77	1.38	0.69	0.59	15.75	13.78	3.39	32
HLS 255.20.1.6-BR	6.6	13⁄16	Bronze	11.81	10.04	15.75	14.17	1.81	1.97	1.57	0.87	0.79	17.72	16.14	3.90	50
HLS 305.22.1.8-BR	8.8	⅞	Bronze	13.78	12.01	18.11	16.54	1.81	1.97	1.77	1.02	0.79	20.47	18.90	3.90	70
HLS 345.24.1.10-BR	11.0	15⁄16	Bronze	15.75	13.58	20.87	18.90	2.01	2.36	1.97	1.26	0.79	23.62	21.65	4.45	100

Minimum Ultimate Strength = 4 x WLL

BALL OR CYLINDRICAL ROLLER BEARING

Model No.	WLL (UStons)	Wire size up to (inch)	Bearing	Dimensions (inch)												Weight (lbs)
				øD1	øD2	A	B	C	F	øG	øH	T	TA	TB	TC	
HLS 105.10.1.1-BR	1.1	⅜	2 x Ball	4.92	4.13	7.09	5.91	0.89	1.06	0.87	0.35	0.31	7.87	6.69	2.13	5
HLS 120.12.1.2-BR	2.2	½	2 x Ball	5.91	4.72	8.66	7.48	1.22	1.57	1.18	0.43	0.39	9.84	8.66	2.83	10
HLS 165.14.1.3-BR	3.3	9⁄16	2 x Ball	7.87	6.50	11.42	9.45	1.30	1.57	1.18	0.53	0.47	12.60	10.63	2.99	17
HLS 210.18.1.4-BR	4.4	11⁄16	Straight	9.84	8.27	14.17	12.20	1.52	1.77	1.38	0.69	0.59	15.75	13.78	3.39	32
HLS 255.20.1.6-BR	6.6	13⁄16	Straight	11.81	10.04	15.75	14.17	1.81	1.97	1.57	0.87	0.79	17.72	16.14	3.90	50
HLS 305.22.1.8-BR	8.8	⅞	Straight	13.78	12.01	18.11	16.54	1.81	1.97	1.77	1.02	0.79	20.47	18.90	3.90	70
HLS 345.24.1.10-BR	11.0	15⁄16	Straight	15.75	13.58	20.87	18.90	2.01	2.36	1.97	1.26	0.79	23.62	21.65	4.45	100

Minimum Ultimate Strength = 4 x WLL

WLL= Working Load Limit on head fitting.

- The indicated WLL is valid at 180° wrap.
  The FoS may decrease in other loading conditions.

WARNING
SEE OUR WARNING & SAFETY INFORMATION ON PAGES 134 - 146

SEE OUR WARNING AND SAFETY INFORMATION ON PAGE 134

VERTICAL DIRECTIONAL BLOCKS

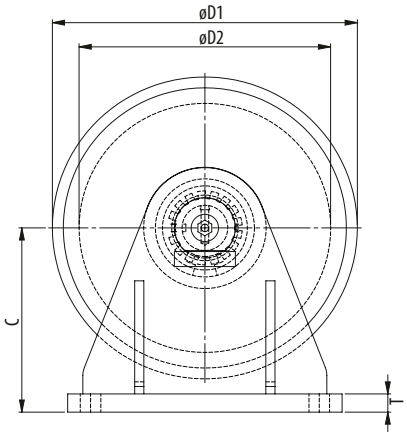

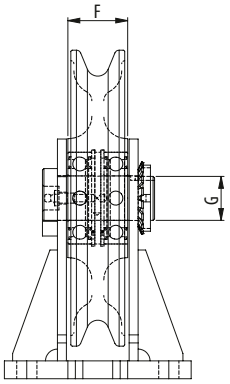

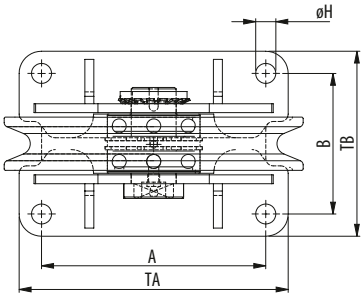

BRONZE BUSHING

Model No.	WLL (UStons)	for wire ød (inch)	Bearing	Dimensions (inch)											Weight (lbs)
				øD1	øD2	A	B	C	F	G	øH	T	TA	TB	
VLS 105.10.1.1-BR	1.1	⅜	Bronze	4.92	4.13	3.54	2.76	3.27	1.06	0.87	0.35	0.31	4.53	3.74	3
VLS 120.12.1.2-BR	2.2	½	Bronze	5.91	4.72	4.53	3.35	3.74	1.57	1.18	0.43	0.39	5.51	4.33	5
VLS 165.14.1.3-BR	3.3	9⁄16	Bronze	7.87	6.50	5.91	3.74	4.80	1.57	1.18	0.53	0.47	7.09	4.92	8
VLS 210.18.1.4-BR	4.4	11⁄16	Bronze	9.84	8.27	7.48	4.72	6.10	1.77	1.38	0.69	0.59	9.06	6.30	17
VLS 255.20.1.6-BR	6.6	13⁄16	Bronze	11.81	10.04	8.66	5.91	7.28	1.97	1.57	0.87	0.79	10.63	7.87	26
VLS 305.22.1.8-BR	8.8	⅞	Bronze	13.78	12.01	10.63	6.30	8.66	1.97	1.77	1.02	0.98	12.99	8.66	41
VLS 345.24.1.10-BR	11.0	15⁄16	Bronze	15.75	13.58	11.81	7.48	10.04	2.36	1.97	1.26	1.18	14.57	10.24	64

Minimum Ultimate Strength = 4 x WLL

BALL OR CYLINDRICAL ROLLER BEARING

Model No.	WLL (UStons)	for wire ød (inch)	Bearing	Dimensions (inch)											Weight (lbs)
				øD1	øD2	A	B	C	F	G	øH	T	TA	TB	
VLS 105.10.1.1	1.1	⅜	2 x Ball	4.92	4.13	3.54	2.76	3.27	1.06	0.87	0.35	0.31	4.53	3.74	7
VLS 120.12.1.2	2.2	½	2 x Ball	5.91	4.72	4.53	3.35	3.74	1.57	1.18	0.43	0.39	5.51	4.33	11
VLS 165.14.1.3	3.3	9⁄16	2 x Ball	7.87	6.50	5.91	3.74	4.80	1.57	1.18	0.53	0.47	7.09	4.92	18
VLS 210.18.1.4	4.4	11⁄16	Straight	9.84	8.27	7.48	4.72	6.10	1.77	1.38	0.69	0.59	9.06	6.30	37
VLS 255.20.1.6	6.6	13⁄16	Straight	11.81	10.04	8.66	5.91	7.28	1.97	1.57	0.87	0.79	10.63	7.87	57
VLS 305.22.1.8	8.8	⅞	Straight	13.78	12.01	10.63	6.30	8.66	1.97	1.77	1.02	0.98	12.99	8.66	90
VLS 345.24.1.10	11.0	15⁄16	Straight	15.75	13.58	11.81	7.48	10.04	2.36	1.97	1.26	1.18	14.57	10.24	141

Minimum Ultimate Strength = 4 x WLL

WLL= Working Load Limit on head fitting.

- The indicated WLL is valid at 180° wrap.
  The FoS may decrease in other loading conditions.

WARNING
SEE OUR WARNING & SAFETY INFORMATION ON PAGES 134 - 146

SEE OUR WARNING AND SAFETY INFORMATION ON PAGE 134

FLAG DIRECTIONAL BLOCKS

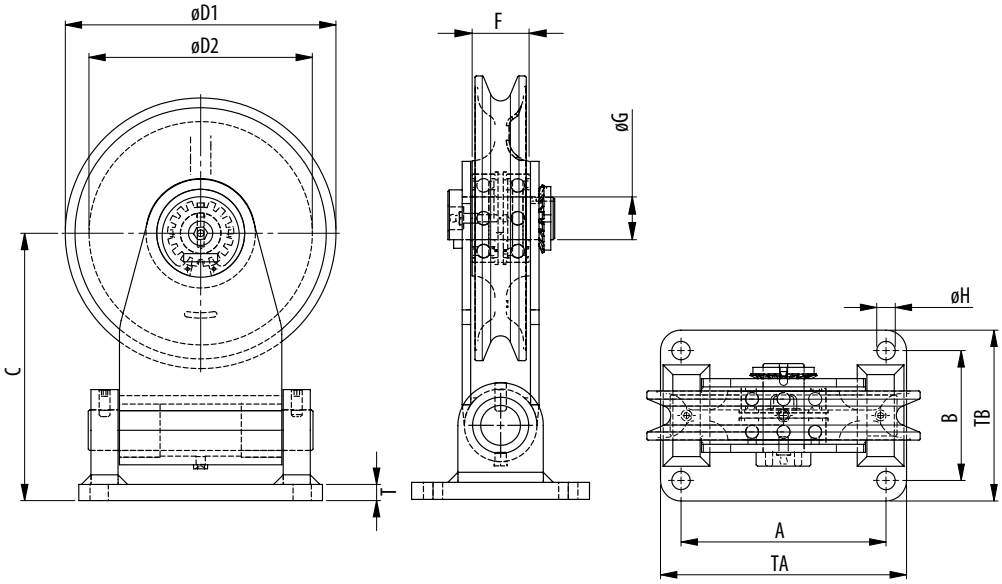

BRONZE BUSHING

Model No.	WLL (UStons)	for wire ød (inch)	Bearing	Dimensions (inch)											Weight (lbs)
				øD1	øD2	A	B	C	F	G	øH	T	TA	TB	
FLS 105.10.1.1-BR	1.1	⅜	Bronze	4.92	4.13	3.54	2.76	3.27	1.06	0.87	0.35	0.31	4.53	3.74	8
FLS 120.12.1.2-BR	2.2	½	Bronze	5.91	4.72	4.53	3.35	3.74	1.57	1.18	0.43	0.39	5.51	4.33	14
FLS 165.14.1.3-BR	3.3	9⁄16	Bronze	7.87	6.50	5.91	3.74	4.80	1.57	1.18	0.53	0.47	7.09	4.92	24
FLS 210.18.1.4-BR	4.4	11⁄16	Bronze	9.84	8.27	7.48	4.72	6.10	1.77	1.38	0.69	0.59	9.06	6.30	46
FLS 255.20.1.6-BR	6.6	13⁄16	Bronze	11.81	10.04	8.66	5.91	7.28	1.97	1.57	0.87	0.79	10.63	7.87	73
FLS 305.22.1.8-BR	8.8	⅞	Bronze	13.78	12.01	10.63	6.30	8.66	1.97	1.77	1.02	0.98	12.99	8.66	115
FLS 345.24.1.10-BR	11.0	15⁄16	Bronze	15.75	13.58	11.81	7.48	10.04	2.36	1.97	1.26	1.18	14.57	10.24	176

Minimum Ultimate Strength = 4 x WLL

BALL OR CYLINDRICAL ROLLER BEARING

Model No.	WLL (UStons)	for wire ød (inch)	Bearing	Dimensions (inch)											Weight (lbs)
				øD1	øD2	A	B	C	F	G	øH	T	TA	TB	
FLS 105.10.1.1	1.1	⅜	2 x Ball	4.92	4.13	3.54	2.76	3.27	1.06	0.87	0.35	0.31	4.53	3.74	8
FLS 120.12.1.2	2.2	½	2 x Ball	5.91	4.72	4.53	3.35	3.74	1.57	1.18	0.43	0.39	5.51	4.33	14
FLS 165.14.1.3	3.3	9⁄16	2 x Ball	7.87	6.50	5.91	3.74	4.80	1.57	1.18	0.53	0.47	7.09	4.92	24
FLS 210.18.1.4	4.4	11⁄16	Straight	9.84	8.27	7.48	4.72	6.10	1.77	1.38	0.69	0.59	9.06	6.30	46
FLS 255.20.1.6	6.6	13⁄16	Straight	11.81	10.04	8.66	5.91	7.28	1.97	1.57	0.87	0.79	10.63	7.87	73
FLS 305.22.1.8	8.8	⅞	Straight	13.78	12.01	10.63	6.30	8.66	1.97	1.77	1.02	0.98	12.99	8.66	115
FLS 345.24.1.10	11.0	15⁄16	Straight	15.75	13.58	11.81	7.48	10.04	2.36	1.97	1.26	1.18	14.57	10.24	176

Minimum Ultimate Strength = 4 x WLL

WLL= Working Load Limit on head fitting.

- The indicated WLL is valid at 180° wrap and 0° swing.
  The FoS may decrease in other loading conditions.

WARNING
SEE OUR WARNING & SAFETY INFORMATION ON PAGES 134 - 146

SEE OUR WARNING AND SAFETY INFORMATION ON PAGE 134